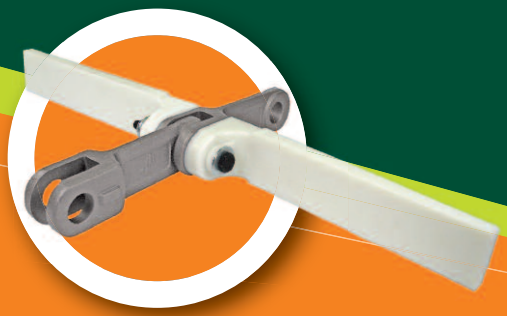





4B GROUP
www.go4b.com

Forged Chains & Sprockets
for the toughest applications

- Forged Chain Links & Pins
- Bolt ‘n’ Go Chain & Flight System
- Sprockets
- Trailers
- Accessories

nqa. ISO 9001 Registered

BETTER BY DESIGN

DROP FORGED CHAIN

www.go4b.com

4B's drop forged chain is made of special heat treated alloy steel, case hardened to Rockwell C57 - C62 with a ductile core hardness of Rockwell C40.

4B's superior heat treatment technique provides the optimum chain link with a more resilient ductile core for shock resistance, and an extremely hard exterior surface for superior wear resistance.

4B's drop forged chain is backed by an international network of companies with over 125 years of experience, and a global team of engineers and sales professionals that can provide you with practical solutions for all your material handling applications.

Drop Forged Chain

Standard Link



Bolt 'N' Go Link

Links and pins are available in all grades of stainless steel

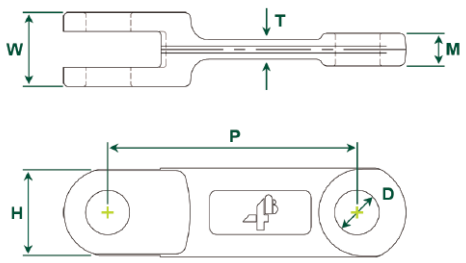

Standard Link

Chain Link	Min Breaking Load (kN)	Min Breaking Load (lb)	Case Hardness	Case Depth (mm)	Core Hardness	Weight (Per Link) (kg)	Bolt 'N' Go Compatible	Dimensions P (mm)	H (mm)	T (mm)	W (mm)	M (mm)	D (mm)
4B102LA	150	33,750	Rockwell C57-C62	0.5	Rockwell C40	0.36	No	102	36	6	25	8	14
4B102NA	180	40,400	Rockwell C57-C62	0.5	Rockwell C40	0.38	Yes	102	36	7	28	12	14
4B125NA	200	44,900	Rockwell C57-C62	0.6	Rockwell C40	0.70	Yes	125	35	10	36	15	16
4B142LA	250	56,250	Rockwell C57-C62	0.7	Rockwell C40	0.66	No	142	40	10	31	14	18.2
4B142NA	300	67,500	Rockwell C57-C62	0.7	Rockwell C40	1.08	Yes	142	50	12	42	18.7	25
4B142HA	450	101,000	Rockwell C57-C62	0.7	Rockwell C40	1.76	Yes	142	50	16.5	62	28.5	25
4B150NA	300	67,500	Rockwell C57-C62	0.7	Rockwell C40	1.20	Yes	150	49	13	36	15	25
4B160NA	350	78,700	Rockwell C57-C62	0.8	Rockwell C40	1.30	Yes	160	44.5	13	42	19.5	20
4B175NA	520	117,500	Rockwell C57-C62	1.0	Rockwell C40	2.73	No	175	60	16	72	22	30
4B200NA	600	135,000	Rockwell C57-C62	1.0	Rockwell C40	2.85	Yes	200	60	18	68	30	30
4B216NA	600	135,000	Rockwell C57-C62	1.0	Rockwell C40	3.66	No	216	75	19	59	26	35
4B250NA	700	158,000	Rockwell C57-C62	1.0	Rockwell C40	4.26	No	250	75	18	70	32	32
4B260NA	700	158,000	Rockwell C57-C62	1.0	Rockwell C40	5.38	No	260	75	21	71	31	32

BOLT ‘N’ GO™

PATENTED

The Bolt ‘N’ Go flight system is a revolutionary assembly method for drop forged chain. Link and flight assembly is made easy by using a standard bolt and mechanical lock nut with a high strength, heat treated hollow pin. There are no circlips and no intricate assembly is required. There is no welding of flights, no need to remove chain from the conveyor for installation, and no issues with strength. Just bolt the links and the flights together. It’s easy, simple and reliable!

Forged Chain



Detailed View of Bolt ‘N’ Go Showing Assembly Method

Bolt ‘N’ Go System

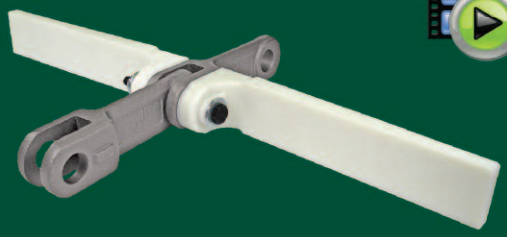

Bolt ‘N’ Go Video: Scan the QR code

Bolt ‘N’ Go Chain	Nylon Flight Maximum Width
4B102BNA	up to 390 mm
4B142BNA	up to 752 mm
4B142BHA	up to 772 mm

NOTE: 4B125BNA, 4B150BNA, 4B160BNA & 4B200BNA Chain also available, Contact 4B For More Information

Feed Mill Application using Bolt ‘N’ Go Chain with Nylon Flights



Assembled Bolt ‘N’ Go Chain



WELDED FLIGHTS & PINS

FREE Engineering Design Service - Contact 4B

www.go4b.com

TYPICAL WELDED FLIGHT ATTACHMENTS



Square Bar Flight



Flat Bar Flight



Paddle Flight



U Flight



Closed U Flight



Closed U Flight with Filler Plates



00 Flight

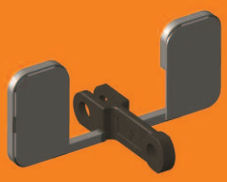

00 Flight with Filler Plates

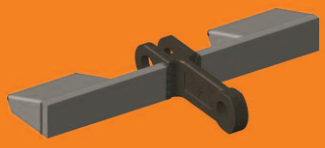

Return Cups

Note: Custom flights are available, based on customer specifications.

STANDARD PIN OPTIONS

Note: Clamps, roll pins, hex bolts and lock nuts must not be re-used. Install one time and discard after use.

Note: Links & Pins are available in 304, 316 & 420 Stainless Steel.



Forged Head Pin, Collar and Roll Pin

Forged Head Pin and One Clamp

Plain Pin and Two Clamps

Bolt ‘N’ Go Hollow Pin, Bolt, Washers and Nut

DOUBLE & TRIPLE LINKS

www.go4b.com

4B's double and triple links are forged with the same quality, strength and durability as our standard links.

Double Link



Triple Link



Double & Triple Links

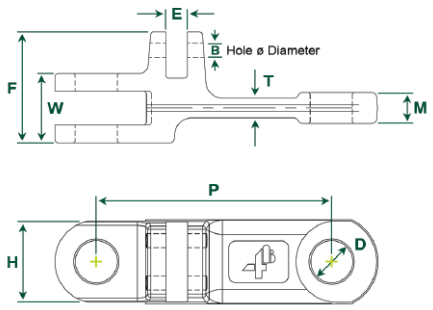

Double Link

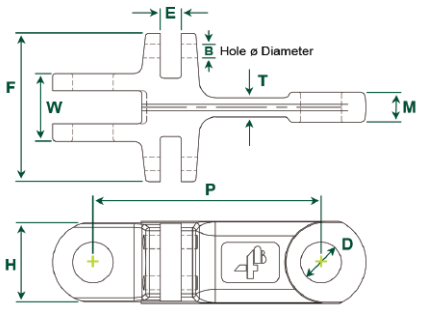

Triple Link

Triple Configuration

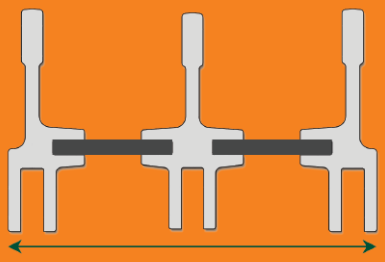

Widths to 3.7m

Chain Link	Min Breaking Load (kN)	(lb)	Case Hardness	Case Depth (mm)	Core Hardness	Weight (Per Link) (kg)	Bolt 'N' Go Compatible	Dimensions P (mm)	H (mm)	T (mm)	W (mm)	M (mm)	D (mm)	F (mm)	E (mm)	B (mm)
4B142DNA	300	67,500	Rockwell C57-C62	0.7	Rockwell C40	1.37	No	142	50	12	42	18.7	25	67	13	8.5
4B142DHA	450	101,000	Rockwell C57-C62	0.7	Rockwell C40	2.00	No	142	50	16	62	28	25	87	13	8.5
4B142TNA	300	67,500	Rockwell C57-C62	0.7	Rockwell C40	1.67	No	142	50	12	42	18.7	25	92	13	8.5
4B142THA	450	101,500	Rockwell C57-C62	0.7	Rockwell C40	2.32	No	142	49	16	62	28.5	25	112	13	8.5
4B175DNA	520	117,500	Rockwell C57-C62	1.0	Rockwell C40	3.17	No	175	60	16	72	22	30	96	17	10.5

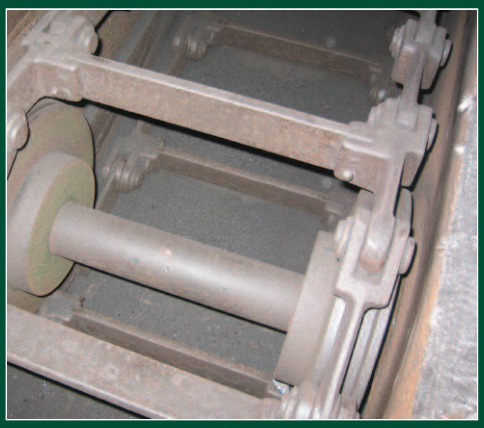

Typical Double Strand Chain Application

FREE Engineering Design Service - Contact 4B

BOLT ‘N’ GO™ ROUND LINK CHAINS

PATENTED

Economical Round Link Chain System

Easy flight assembly by using a standard bolt and nut, connecting the flights directly to the link. The chain can be supplied in a coil together with the bolt-on flights already assembled.

Round Link Chain with Bolt ‘N’ Go Flights



Size 13 x 65mm



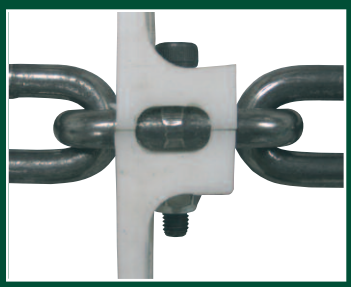



Bolt ‘N’ Go System Round Link Chain Application on a Conveyor

Round Link Chain	Miscellaneous Conveyor Chain
	
ON DEMAND Separate datasheets available	ON DEMAND Separate datasheets available
	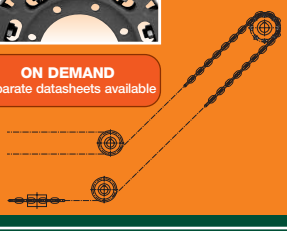

ACCESSORIES

For more details please visit
www.go4b.com

www.go4b.com

NYLON FLIGHTS FOR SCRAPER CHAINS



‘L’ Shape with 1 fixing hole



‘L’ Shape with 2 fixing holes



‘T’ Shape with 2 fixing holes

- Easy to install or replace, cutting down installation and maintenance costs
- Eliminates the need for a bottom liner in the conveyor
- Reduces conveyor noise

NYLON FLIGHT SLEEVES FOR 102 NA CHAIN and 142 NA CHAIN

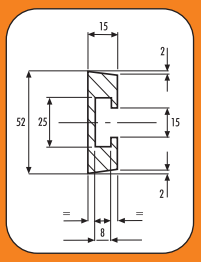

102 NA

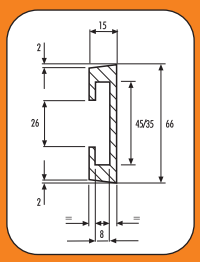

142 NA

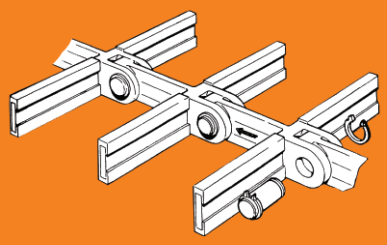

MANGANESE RAILS FOR FORGED CHAINS

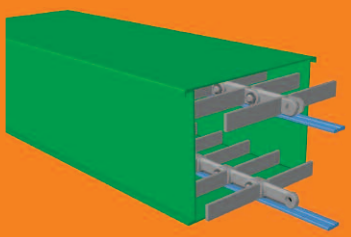

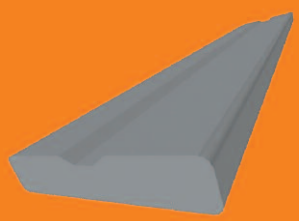

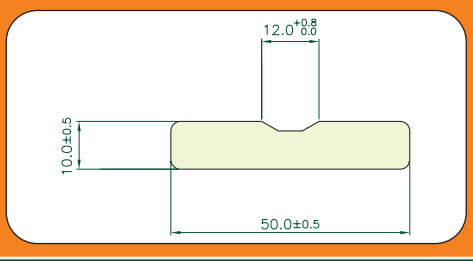

Available sizes:

40 x 10mm
50 x 10mm
60 x 10mm

More sizes on request.

SPROCKETS

www.go4b.com



4B sprockets and trailers are manufactured from high grade heat treated steel to a minimum hardness of 57 HRC. Each piece is machined to size with appropriate bore and keyway specific to each customer's application. Most sizes are in stock and ready to ship from 4B's extensive inventory.

Sprockets

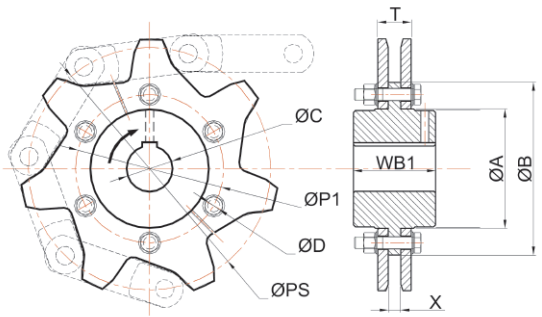

Standard Sprocket (Shown with Hub)

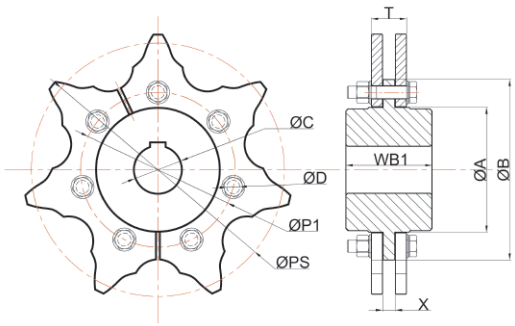

Wear Reversible Sprocket (Shown with Hub)

Chain Link	No. of Teeth	ØPS (mm)	ØP1 (mm)	ØA (mm)	ØB (mm)	ØC (mm) Max.	ØD (mm)	N No. of Holes	T (mm)	X (mm)	WB1 (mm)
4B102NA	6	204.0	–	105.0	135.0	70	–	–	30	10	83
	7	235.1	146.0	108.0	173.0	70	M12	6	30	10	83
	8	266.5	170.0	144.0	196.0	85	M12	6	30	10	83
	9	298.2	200.0	174.0	232.0	105	M12	6	30	10	83
	10	330.1	241.3	179.0	264.0	105	M12	8	30	10	83
4B142NA	6	284.0	168.3	136.5	190.5	85	M12	6	46	16	112
	7	327.3	200.0	162.0	234.0	105	M16	6	46	16	112
	8	371.1	241.3	187.3	282.0	115	M20	8	46	16	127
	9	415.2	285.8	240.0	330.0	150	M20	8	46	16	127
	10	459.5	285.8	240.0	330.0	150	M20	8	46	16	127
	11	504.0	368.3	310.0	419.0	170	M20	8	46	16	150
	12	548.6	415.0	345.0	465.0	170	M20	8	46	16	150
	13	593.4	470.0	380.0	521.0	170	M20	8	46	16	150
	14	638.1	470.0	380.0	546.0	170	M20	10	46	16	150
4B142HA	7	327.3	200.0	162.0	234.0	105	M16	6	69	19	127
	8	371.1	241.3	187.3	282.0	115	M20	8	69	19	150
	9	415.2	285.8	240.0	330.0	150	M20	8	69	19	150
	10	459.5	285.8	240.0	330.0	150	M20	8	69	19	150
	11	504.0	368.3	310.0	419.0	170	M20	8	69	19	150
	12	548.6	415.0	345.0	465.0	170	M20	8	69	19	150
	13	593.4	470.0	380.0	520.0	170	M20	8	69	19	180
	14	638.1	470.0	380.0	546.0	170	M20	10	69	19	180

TRAILERS

FREE
Engineering Design Service
- Contact 4B

www.go4b.com

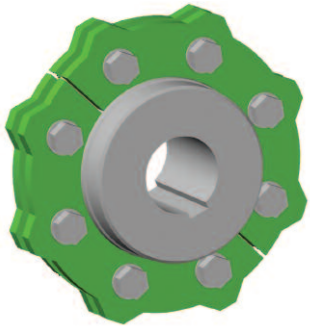

Trailers

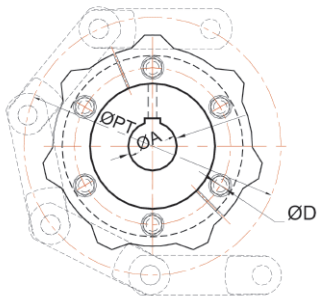

Segmental Star Trailer (Shown with Hub)

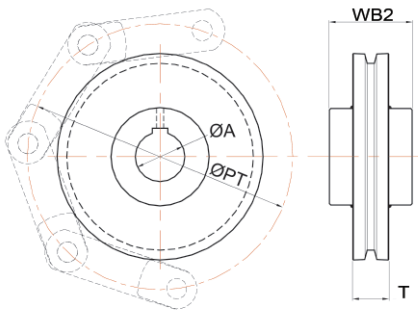

Smooth Trailer

Chain Link	Max Shaft Dia. ØA (mm)	Pitch Circle Dia. ØPT (mm)	Hub Width Dia.* (mm) Smooth WB2	Hub Width Dia.* (mm) Segmental WB3	Rim Width Dia. T (mm)
4B102NA	65	204.0	57	83	35
	65	235.1	57	83	35
	65	266.5	57	83	35
	65	298.2	57	83	35
	65	330.1	57	83	35
4B142NA	85	284.0	74	112	45
	85	327.3	74	112	45
	85	371.1	77	127	45
	115	415.2	77	127	45
	115	459.5	77	127	45
	115	504.0	105	150	45
	115	548.6	105	150	45
	115	593.4	120	150	45
	115	638.1	120	150	45
4B142HA	115	327.3	110	127	75
	115	371.1	110	150	75
	115	415.2	110	150	75
	115	459.5	120	150	75
	140	504.0	120	150	75
	140	548.6	120	150	75
	140	593.4	120	150	75
	140	638.1	140	150	75

* Smooth and segmental trailers have different hub widths as noted (WB2 & WB3).
– 4B offers any bore size to suit your requirements, consult with our engineers for recommended shaft diameter.
– 216NA and 260NA sizes are available, contact 4B for more information.

APPLICATION PHOTOS

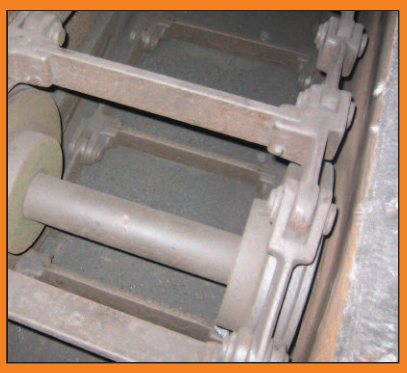

Typical Double Strand Chain Application



Feed Mill Application using Bolt 'N' Go Chain with Nylon Flights

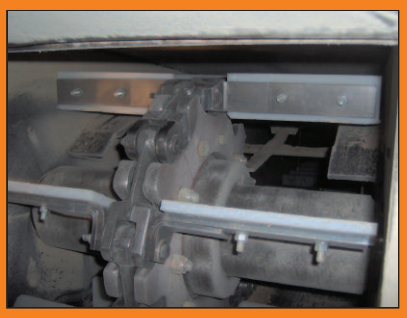

UHMW Paddles on "T" Plate Flights – Drive End

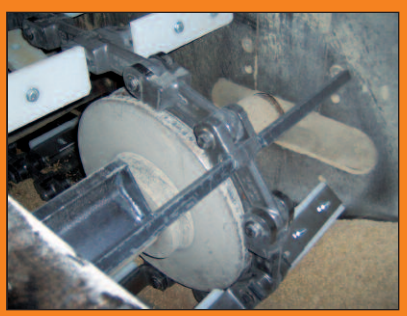

UHMW Paddles & Return Buckets – Tail End

4B BRAIME COMPONENTS
Headquarters
Hunslet Road
Leeds LS10 1JZ
UK
Tel: +44 (0) 113 246 1800
Fax: +44 (0) 113 243 5021
Email: 4b-uk@go4b.com

4B COMPONENTS
625 Erie Avenue
Morton, IL 61550
USA
Tel: 309-698-5611
Fax: 309-698-5615

4B FRANCE
9 Route de Corbie
80800 Lamotte Warfusée
FRANCE
Tel: +33 (0) 3 22 42 32 26
Fax: +33 (0) 3 22 42 37 33
Email: 4b-france@go4b.com

4B DEUTSCHLAND
9 Route de Corbie
F-80800 Lamotte Warfusée
FRANCE
Tel: +49 (0) 700 2242 4091
Fax: +49 (0) 700 2242 3733
Email: 4b-deutschland@go4b.com

4B ASIA PACIFIC
Build No.899/1 Moo 20, Soi Chongsiri,
Bangplee-Tam Ru Road, Tanbon
Bangpleeyai, Amphur Bangplee,
Samutprakarn, 10540
THAILAND
Tel: +66 (0) 2173-4339
Fax: +66 (0) 2173-4338
Email: 4b-asiapacific@go4b.com

4B AFRICA
14 Newport Business Park Mica Drive,
Kya Sand, 2163 Johannesburg
SOUTH AFRICA
Tel: +27 (0) 11 708 6114
Fax: +27 (0) 11 708 1654
Email: 4b-africa@go4b.com

4B AUSTRALIA
Unit 1-18 Overlord Place
Acacia Ridge
Queensland 4110
AUSTRALIA
Tel: +61 (0) 7 3711 2565
Fax: +61 (0) 7 3711 2574
Email: 4b-australia@go4b.com



4B catalogues also available:

- Elevator Buckets
- Elevator Belting
- Bolts & Fasteners
- Electronics

Please contact us on: **+44 (0) 113 246 1800**
4b-uk@go4b.com

www.go4b.com

BETTER BY DESIGN

Our policy is one of continuous improvement; therefore we reserve the right to amend specification without prior notice.
All information contained herein is provided in good faith and no warranty is given or implied. E&OE.